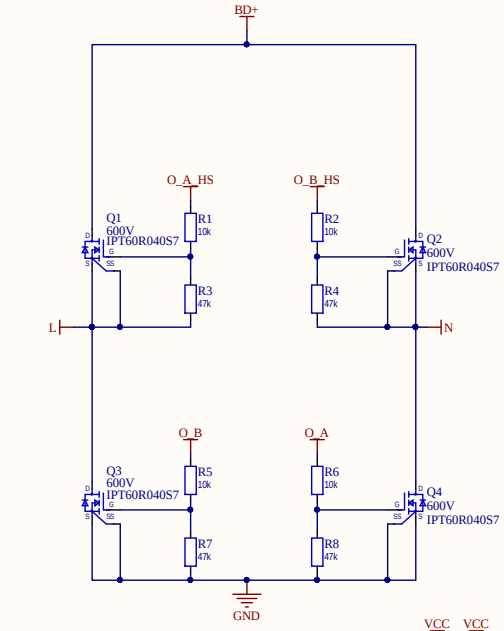

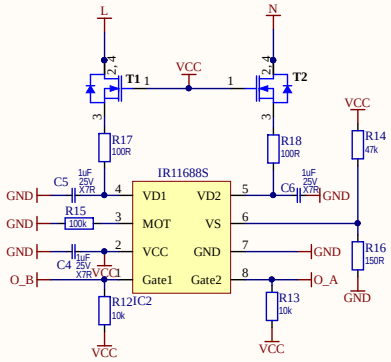

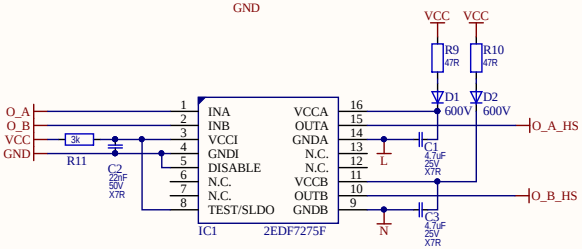

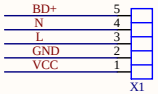

FID1 Fiducial Fiducials
FID2 Fiducial Fiducials
FID3 Fiducial Fiducials
FID4 Fiducial Fiducials

Title *			
Size: A3	Number:*	Revision:*	
Date: 20.08.2019	Time: 17:07:01	Sheet * of *	
File: C:\Users\Pevere\Desktop\2.4kW PFC\Altium\PW100002481\PW100002481.SchDoc			

Altium

Layer	Name	Material	Thickness	Constant	Board Layer Stack
	Top Overlay				
	Top Solder	Solder Resist	0,010mm	3,5	
1	L1	Copper	0,070mm		
	Dielectric 1	FR-4	0,254mm	4,2	
2	L2	Copper	0,070mm		
	Dielectric 3	FR-4	0,254mm	4,2	
3	L3	Copper	0,070mm		
	Dielectric 2	FR-4	0,254mm	4,2	
4	L4	Copper	0,070mm		
	Solder Side	Solder Resist	0,010mm	3,5	
	Bottom Overlay				

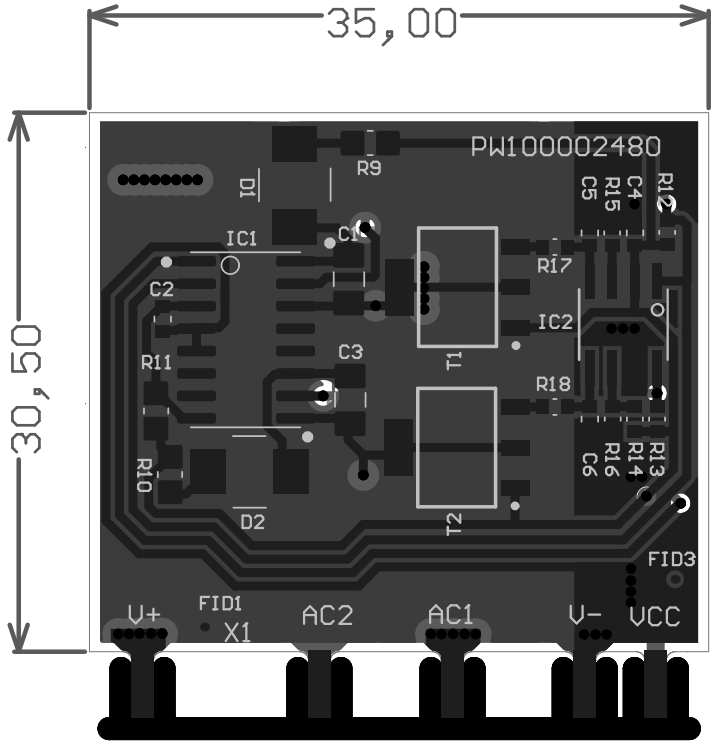

Top&Bottom&Front&sidewalls covered with copper

Comment	Description	Designator	Footprint	LibR
SMD	Capacitor Ceramic	C1, C3	CAP1206R	C_C
SMD	Capacitor Ceramic	C2, C4, C5, C6	CAP0603R	C_C
SMD	Standard Diode	D1, D2	SMB / DO-214AA	D
SMD	Integrated Ciruit	IC1	DSO-16 narrow	2ED
SMD	Integrated Circuit	IC2	SOIC8	IR1
SMD	NMOSFET	Q1, Q2, Q3, Q4	HSOF-8-2	T_N
SMD	Resistor	R1, R2, R3, R4, R5, R	RES0603R	R
SMD	Resistor	R9, R10, R11	RES0805-IEX	R